chryso SAINT-GOBAIN gcp SAINT-GOBAIN FOSROC weber SAINT-GOBAIN

BRIDGE SOLUTIONS

COMPREHENSIVE RANGE OF SOLUTIONS FOR BRIDGE INFRASTUCTURES

SAINT-GOBAIN

Bridge Solutions

Saint-Gobain Construction Chemicals enlists **Chryso**, a specialist in cement additives and concrete admixtures, **GCP**, a world-renowned expert in waterproofing systems, **Fosroc**, a leading provider of specialty construction solutions, and **Weber**, a worldwide leader in mortar-based solutions.

Built on **close collaboration** with leading bridge construction stakeholders for new and refurbishment projects, our consultative, end-to-end approach spans **from early design support to on-site expertise**.

Together, we develop **innovative solutions** to address today's and tomorrow's construction challenges.

Our solutions help bridges **withstand extreme climates**, **extend design life**, and deliver **durable**, **sustainable protection**.

CONTENT

CONSTRUCTION.....3

PROTECTION.....5

FINISHING.....7

MAINTENANCE.....9

Construction

WE PROVIDE A WIDE RANGE OF SOLUTIONS FOR BRIDGE CONSTRUCTION, FROM CONCRETE FORMULATION TO SPECIALITY MORTARS AND STRENGTH MONITORING.

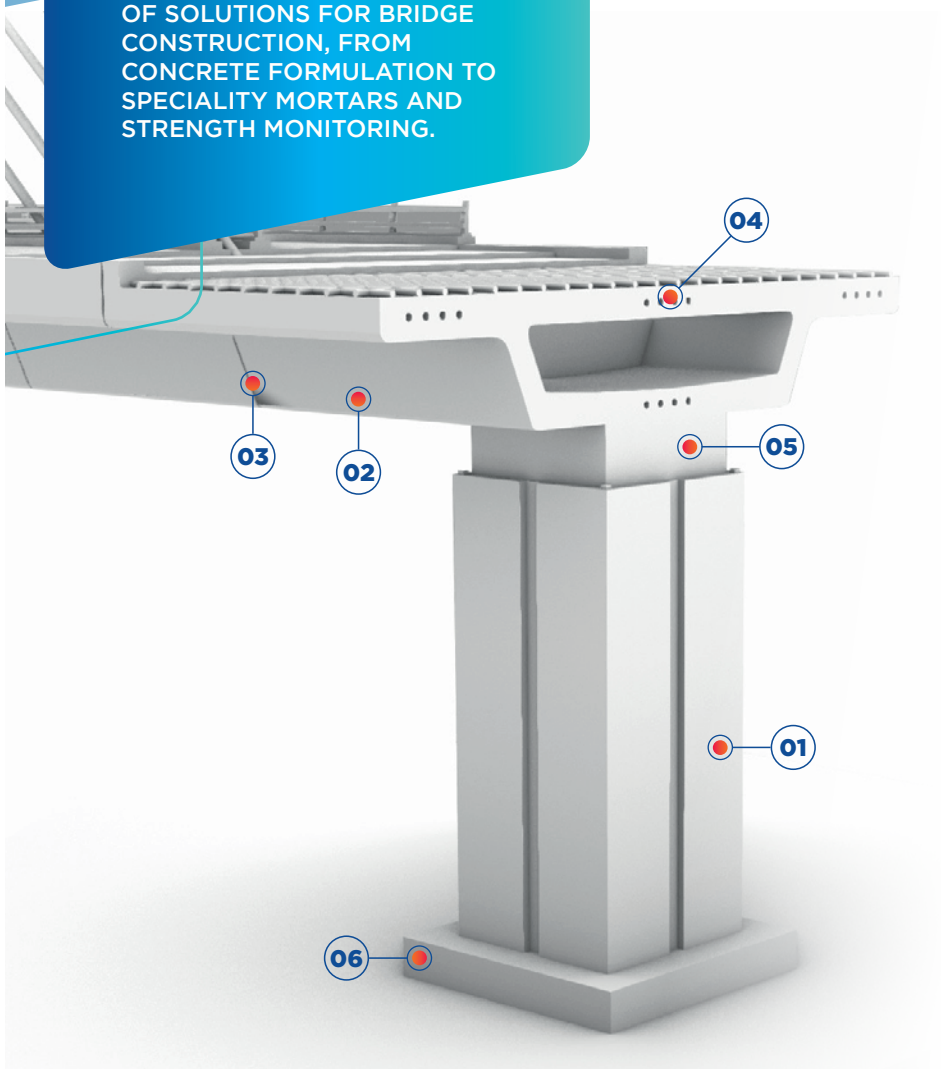

01

Admixtures for Ready-Mix Concrete

Through our Chryso and Fosroc brands, we bring over 80 years of expertise in the field of concrete.

Our concrete admixture solutions and our knowledge enable us to address all technical challenges:

- Pumpability
- Workability retention
- Carbon footprint & Cost optimization
- Increasing SCM replacement
- Enabling using local aggregates
- Early and final strength at will
- Durability

OUR SOLUTIONS

Superplasticizers, Shrinkage & Corrosion inhibitors, Underwater concreting admixtures, Fibers, Release Agents

Chryso®Optima • Chryso®Adva • EnviroMix® • Quad® • Auramix® • Chryso®Cl • Chryso®V-MAR • Chryso®CWA • Adfil® • Chryso®Dem

OUR SERVICES

+ Tailored product offer
+ Raw materials characterization (Quad® Lab)
+ EnviroMix® Impact
+ Technical expertise
+ Laboratory support

02

Solutions for Precast Concrete

When pace is critical, precision makes the difference. Our precast solutions secure quality and keep production on schedule:

- Ensuring durability
- Highest finishing quality standard
- Production control and robustness
- Improving productivity
- Fast and easy deshuttering
- Enhancing use of close raw materials sources
- Achieving low carbon footprint
- Optimizing low W/C ratio

OUR SOLUTIONS

Plasticizers & Superplasticizers, Release Agents, Curing compounds, Accelerators

Chryso®Premia • Chryso®Advacast • Auracast® • Chryso®Dem • Auramol® • Reebol® • Pieri®Easy Cure • Chryso®Daraset • Concure

OUR SERVICES

+ Concrete Monitoring (Maturix®)
+ Mix design optimization
+ Raw materials characterization (Quad® Lab)
+ Support for best finished pieces (aesthetics)
+ Tailored Product offer

03

Segmental Adhesives

Implemented as part of the post tensioning process, segmental adhesives are used to bond the precast segments together. They play an important role in ensuring the structural integrity of the bridge.

By ensuring even load distribution across joints and providing strong resistance to moisture, our segmental adhesives help protect the structure from environmental contaminants. This enhances both the durability and the long-term service life of the bridge.

OUR SOLUTIONS

Specialty adhesives

Nitobond SBA • Nitobond PC • Weberep Epo 412 CRY • Weberep Epo 412 CRY Plus

OUR SERVICES

+ Product selection and specification support
+ Applicator training

04

Post Tensioning Grouts

Post-tensioned tendons have extremely high levels of stress and therefore any damage to them can lead to severe, even catastrophic, failures in bridge structures.

As part of our approach, we use a highly fluid yet stable grout to fill the space between the post tensioned tendons and their sleeve. Our grout can be pumped over long distances through small apertures without segregation or void formation, ensuring consistent protection and long term durability of the tendon system.

OUR SOLUTIONS

Specialty grouts

Conbextra Cable Grout • Cebex Cable Grout • Webertec 303 HFG

OUR SERVICES

+ Product selection and specification support
+ Applicator training

05

Bearing Grouts

To meet the demands of modern construction, our bearing grouts deliver high overall strength, and, when required, high early strength, allowing for rapid turnaround and enabling loads to be applied within just a few days.

In addition, they are engineered to resist moisture penetration and contaminants such as chlorides, providing long term durability and protection for critical structural components.

OUR SOLUTIONS

Specialty grouts

Conbextra BB range • Webertec Epo 430 GRT Plus • Lokfix E77

OUR SERVICES

+ Product selection and specification support
+ Applicator training
+ Supervision of critical pours

06

Concrete Monitoring Solutions

Verifi® is a market-leading digital in-transit concrete management suite that measures and manages slump, water, and admixture in concrete trucks using AI algorithms.

Maturix® provides cutting-edge wireless sensor technology that allows remote real-time monitoring of concrete properties during the curing and hardening process, enabling contractors to optimize their operations and ease traceability requirements.

OUR SOLUTIONS

In-transit & On-site concrete monitoring solutions

Verifi® • Maturix®

OUR SERVICES

+ i.e. technical service

Protection

WE PROVIDE A COMPREHENSIVE RANGE OF PROTECTION SYSTEMS AND SOLUTIONS THAT ARE TRUSTED WORLDWIDE TO ENHANCE THE DURABILITY AND LIFESPAN OF BRIDGES.

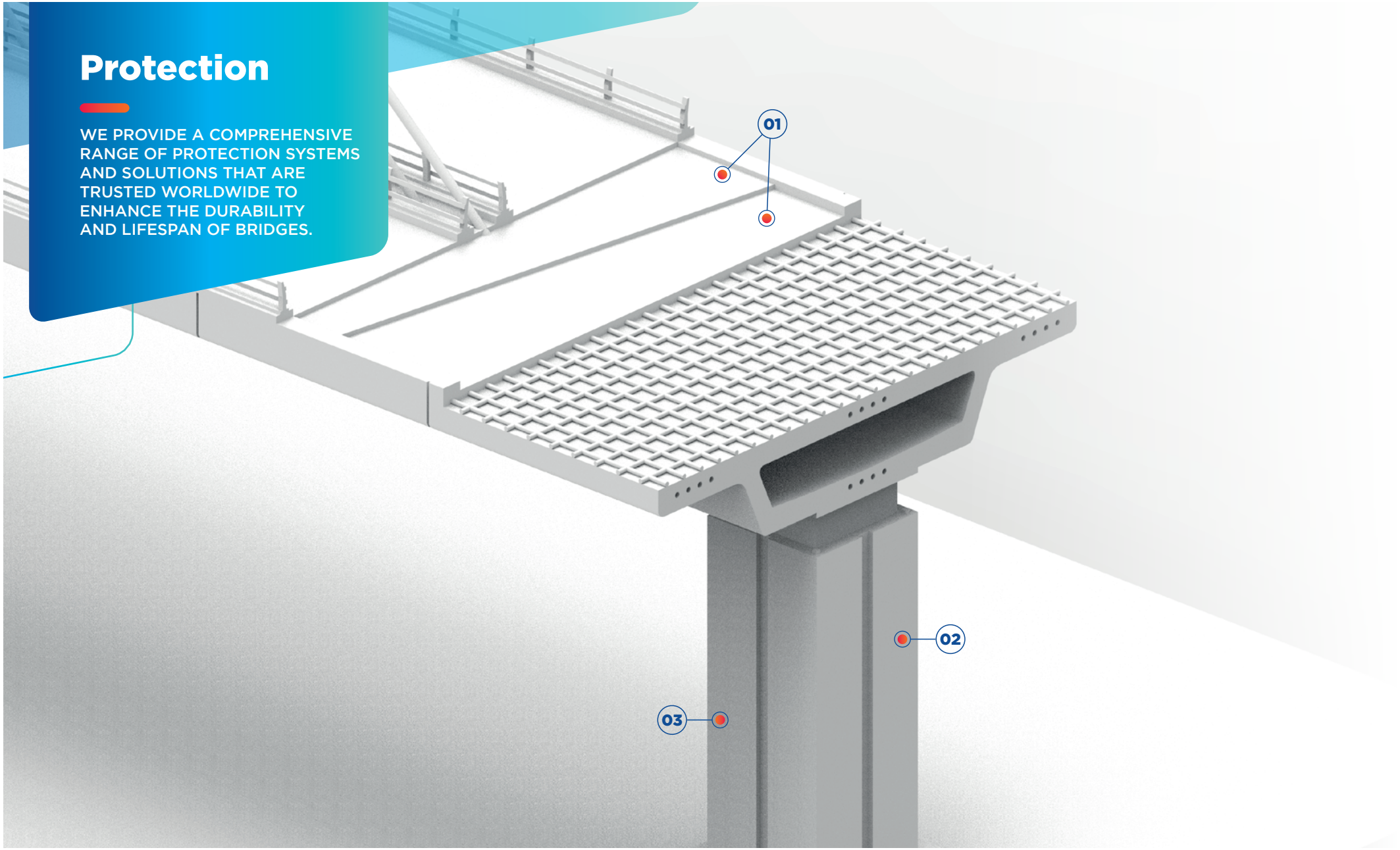

01

Bridge Deck Waterproofing

Our deck waterproofing systems are essential to preserving the long term performance and durability of bridge structures. By protecting the bridge deck from water, salts, and airborne chlorides, our solutions help maintain overall structural integrity and extend the lifespan of the deck.

By minimising damage to both the deck and the surfacing, our high quality deck waterproofing systems significantly reduce maintenance requirements and the associated disruption, delivering long lasting protection.

OUR SOLUTIONS

Waterproofing systems
ELIMINATOR® • ELIMINATOR® Bond Coat 4 • Polyurea WH 500

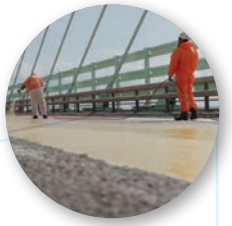

OUR SERVICES

+ Technical support from design through construction and maintenance
+ Applicator training

02

Silane Impregnations

Silane impregnation systems are water repellent pore-lining treatments designed to protect concrete from chloride and other atmospheric contaminants.

By enhancing resistance to environmental exposure, our silane systems significantly improve long term durability, extending the service life of concrete structures such as soffits, columns, and exposed deck parapets. This added protection helps maintain structural performance while reducing future maintenance needs.

OUR SOLUTIONS

Impregnation solutions
Chryso®FiniSol SF 100 • Nitocote SN Range • Weber concrete impregnation creme

OUR SERVICES

+ Technical support
+ Applicator training

03

Anti-Graffiti Coating

Our anti graffiti coatings cure to form a durable protective barrier that resists damage from most permanent markers and aerosol paints. This non-sacrificial coating allows graffiti to be easily washed away using only dry cloth or by using a cloth with cold water.

Engineered for long lasting performance, our coating provides robust defence and can withstand up to 20 graffiti removal cycles without requiring reapplication. This ensures lasting protection, reduced maintenance effort, and a cleaner, more resilient structure.

OUR SOLUTIONS

Anti-graffiti coatings
Chryso®XTag • Nitocote AG

OUR SERVICES

+ Technical support
+ Applicator training

Finishing

WE DELIVER ADVANCED BRIDGE FINISHING SOLUTIONS DESIGNED TO ENHANCE APPEARANCE, IMPROVE DURABILITY, AND PROVIDE LONG-LASTING PROTECTION.

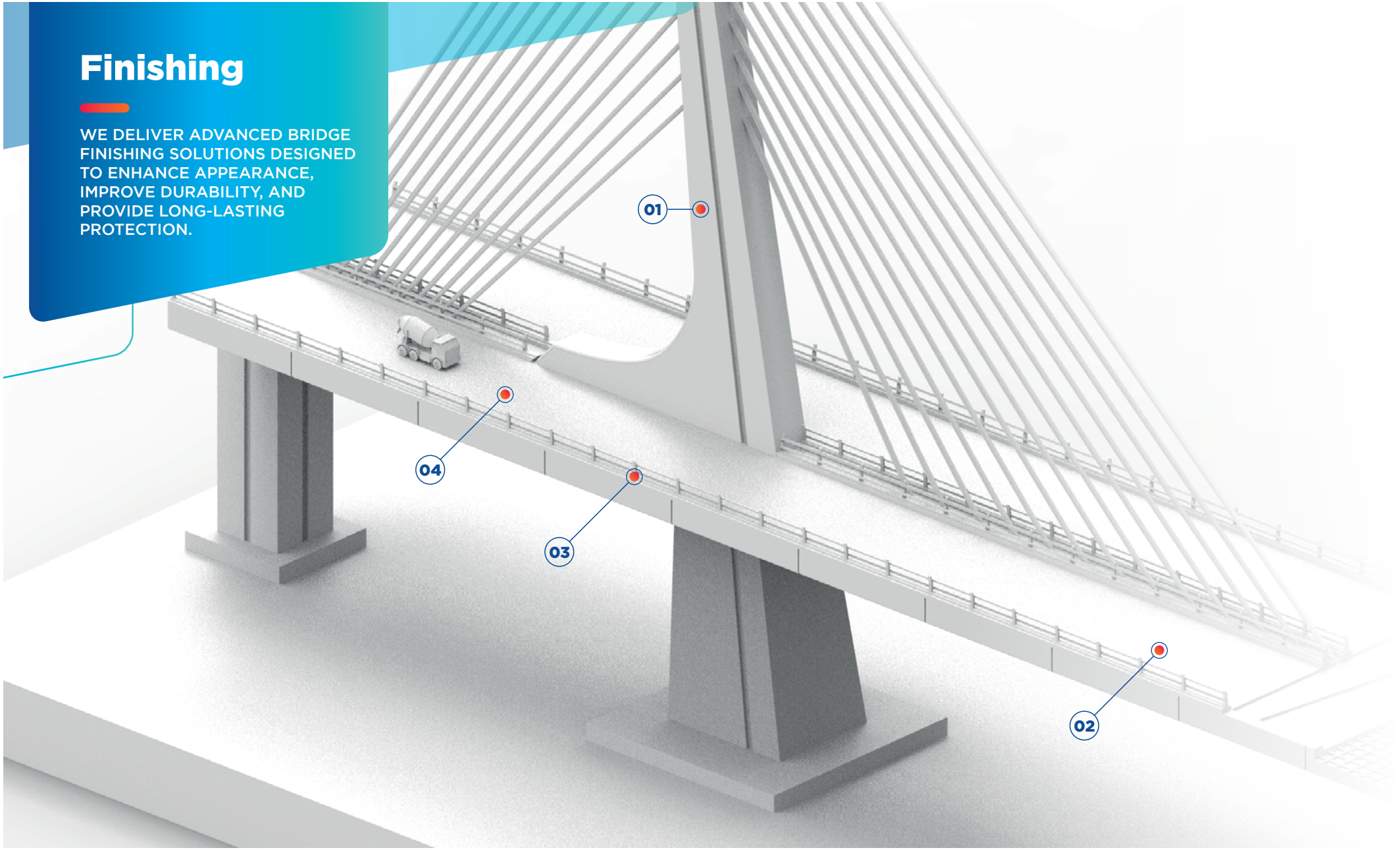

01

High Performance Protective Coatings

Our high performance coatings are engineered to protect concrete bridges against carbonation, chloride ingress, harsh weather conditions, and other atmospheric contaminants that can weaken the bridge structure.

Designed for use both during initial construction and in subsequent repair or refurbishment work, our coatings can also provide an attractive decorative finish. By applying our system, we can enhance structural durability and extend design life and maintenance cycle gaps by many years.

OUR SOLUTIONS

Protective coatings
Dekguard E2000 • Dekguard S • Dekguard PU • Webercote Beton Plus

OUR SERVICES

+ Technical support from design through construction and maintenance
+ Applicator training

02

Combined Waterproofing & Surfacing Systems

These lightweight systems combine waterproofing and a wearing course to provide long term protection for both pedestrian and trafficked bridges.

Combined waterproofing and surfacing solutions offer considerable weight reductions over traditional systems with asphalt overlays, and are particularly suited to applications where reduced dead-loads are beneficial such as bascule bridges.

OUR SOLUTIONS

Lightweight systems
BRIDGEMASTER® • Nitoproof ET / NT • Nitoflor ET / NT

OUR SERVICES

+ Technical support from design through construction and maintenance
+ Applicator training

03

Grouts & Anchoring

Our high strength grouts ensure structural integrity and load carrying continuity across concrete sections. This performance is essential for bridge applications, where designers must consider dead and dynamic loads, vibration, structural movement, and the effects of tensioning.

To complement this, our fast acting, highly durable chemical anchors provide reliable bonding for reinforcement and heavy duty fixings, supporting long term stability and performance.

OUR SOLUTIONS

High strength grouts
Conbextra EP range • Conbextra HF • Conbextra UW • Lokfix E77

OUR SERVICES

+ Product application training and supervision
+ Anchoring and post installation reinforcement design

04

Road Marking

Anti-skid / anti-slip surfacing can be applied directly on the waterproofing membrane or as an overlay on the asphalt pavement.

Our road marking systems can improve skid and slip resistance and provide demarcation for pedestrian areas, cycle routes and bus lanes.

OUR SOLUTIONS

Surfacing systems
SAFETRACK® • Nitoflor ET / NT

OUR SERVICES

+ Technical support from design through construction and maintenance
+ Applicator training

Maintenance

WE PROVIDE BRIDGE MAINTENANCE SOLUTIONS THAT PRESERVE STRUCTURAL INTEGRITY, EXTEND SERVICE LIFE, AND ENSURE LONG-TERM PERFORMANCE.

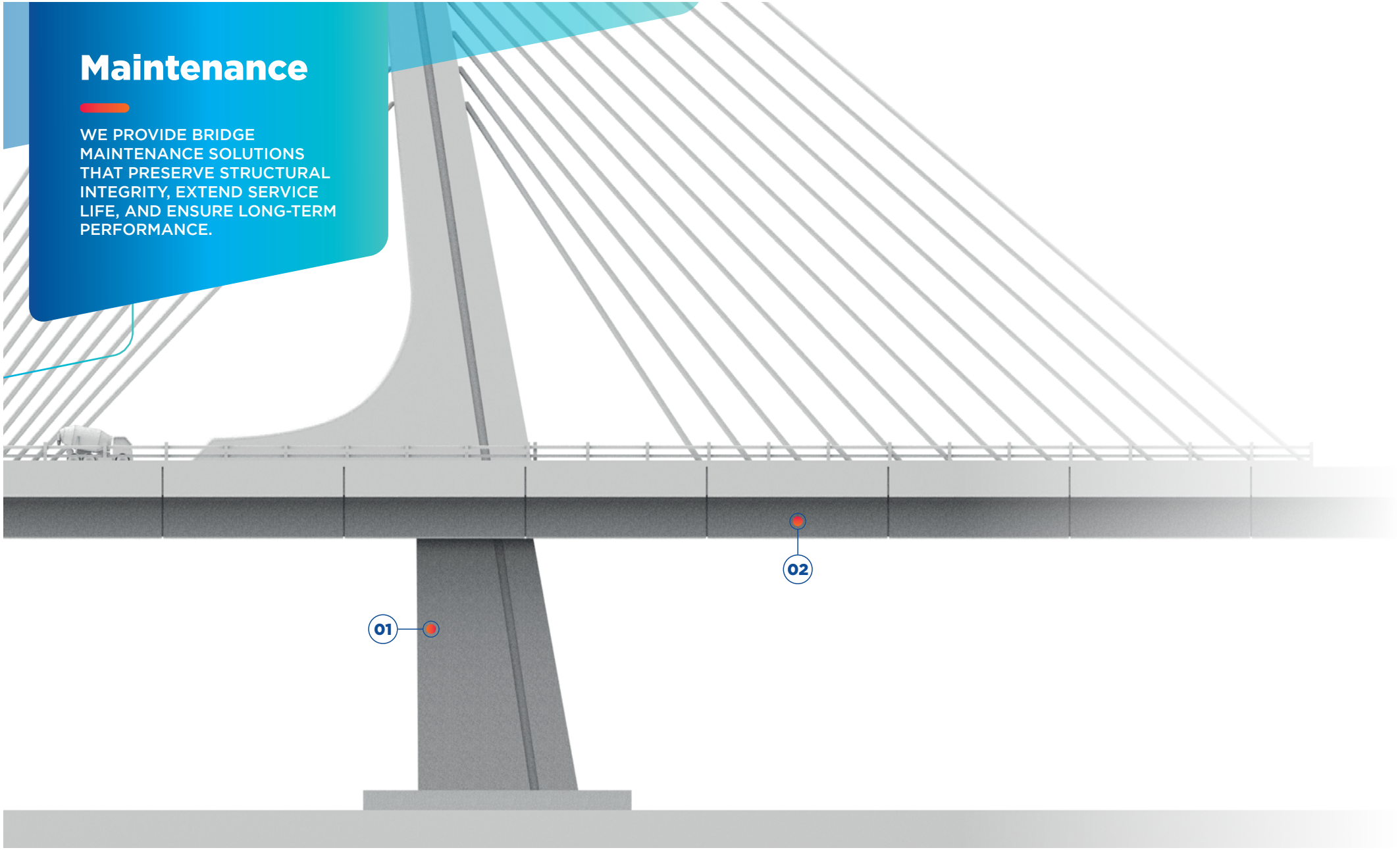

01

Structural Strengthening

Our bridge strengthening solutions address challenges such as reinforcement loss, increased load bearing requirements, updated design standards, and damage caused by mechanical impacts.
Our carbon fibre strengthening systems deliver slimline, lightweight reinforcement that restores lost strength or enhances load carrying capacity.

These systems are highly durable, corrosion resistant, and can be installed rapidly on site to minimise disruption.

Conventional strengthening can also be supported with chemical anchors adhesives and micro concrete or spray mortars.

OUR SOLUTIONS

Strengthening systems, Specialty resins & mortars
Nitowrap • Nitoplate • Nitobond • Lokfix
• Renderoc microconcrete or spray mortars

OUR SERVICES

+ Structural strengthening designs.
+ Application training and supervision.

02

Concrete Repair

Our speciality repair mortars are essential for reinstating concrete damaged by construction defects, age related deterioration, or corrosion.

These repair mortars work systematically with the existing concrete, ensuring compatibility and long term performance. By doing so, we help extend the service life of the structure and restore its durability and integrity.

Systems can be selected depending upon the most appropriate application techniques and compatibly with corrosion solutions.

OUR SOLUTIONS

Repair compounds, Cementitious repair materials, Epoxy resins
METASET® ResiFilla • Renderoc Range • Nitofill LV
• Weberep range • Corrosion solutions

OUR SERVICES

+ Selection advice for repair materials and techniques appropriate to the structure.
+ Training and supervision of specialist applications.
+ Products and advice for the management of corrosion.

gcp SAINT-GOBAIN

Zuhai-Macao Bridge

HONG KONG

SOLUTIONS

- ELIMINATOR®
- ZED S94 (anti-corrosion primer)
- Tack Coat No.2

gcp SAINT-GOBAIN FOSROC weber SAINT-GOBAIN

Oldbury Viaduct

UNITED KINGDOM

SOLUTIONS

- ELIMINATOR®
- Bond Coat 3
- METASET® ResiFilla
- SENTINEL® EMR
- SENTINEL® BJ
- Renderoc LA60
- Concure WB
- Nitoprime Zincrich Plus
- Webercem concrete CP
- Webercem mortar CP

chryso SAINT-GOBAIN gcp SAINT-GOBAIN

Izmit Bay Bridge

TÜRKIYE

SOLUTIONS

- Chryso®Optima 100
- Chryso®Fluid HP
- ELIMINATOR®
- SAFETRACK®

References

Delaware Bridge

rehabilitation

USA

SOLUTIONS

- Tailor-made Chryso UHPC admixture solutions

chryso SAINT-GOBAIN

Danube Braila Bridge

ROMANIA

SOLUTIONS

- Chryso®Optima 200 series
- Chryso®Tard CHR
- Chryso®Xel
- ELIMINATOR®

chryso SAINT-GOBAIN gcp SAINT-GOBAIN

gcp SAINT-GOBAIN

Prince of Wales Bridge *rehabilitation*

UK

SOLUTIONS

- ELIMINATOR®
- ELIMINATOR® Bond Coat 4
- METASET® RESIFILLA

chryso SAINT-GOBAIN

Cebu – Cordova Link Expressway

PHILIPPINES

SOLUTIONS

- Chryso®Premia 105S

FOSROC

DMRC Bridge *rehabilitation*

INDIA

SOLUTIONS

- Nitowrap CWS450
- Renderoc HS XTRA
- Nitocote UR512

References

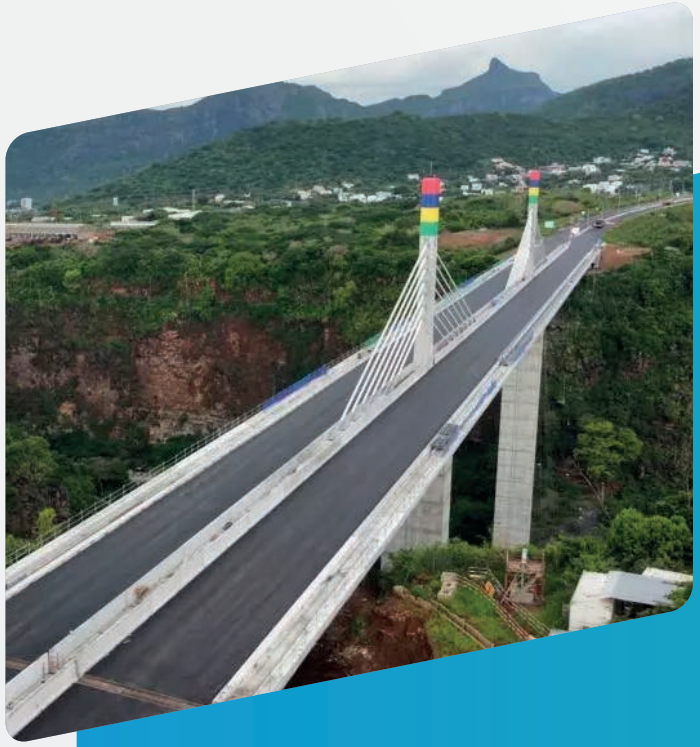

Sir Anerood Jugnauth Bridge

MAURITIUS

SOLUTIONS

- Chryso®Optima 100
- Chryso®Dem Bio 15

chryso SAINT-GOBAIN

Rio-Antirrio Bridge

GREECE

SOLUTIONS

- Chryso®Optima 100

chryso SAINT-GOBAIN

Version 1.0 - February 2026

chryso SAINT-GOBAIN gcp SAINT-GOBAIN FOSROC weber SAINT-GOBAIN

www.saint-gobain.com

- **Chryso:** *www.chryso.com*
- **GCP:** *www.gcpat.com*
- **Fosroc:** *www.fosroc.com*
- **Weber:** *www.saint-gobain.com/en/weber*

Saint-Gobain • Saint-Gobain Tower • 12 place de l'iris • 92400 Courbevoie • France

SAINT-GOBAIN